3/2-Way-Valve
Type 02.3.01.032.01

Technical data

Type of actuation	pneumatic control (closing by spring tension)
Nominal size	32 mm
Pump connection P	internal thread R 1 1/4″
Working connection A	internal thread R 1 1/4″
Ventilation connection R	internal thread R 3/4″
Control connection P1	internal thread R 1/8″
Operating pressure	max. vacuum 99,9 %
Control pressure	4-8 bar
Ambient temperature	max. 80° C

Control valve

Duty cycle ED	100 %
Enclosure protection in compliance with DIN 40050	IP 00 IP 65 with connector (Art.-No. 229/000002)

Power consumption

24 V/DC	10 W
24 V/AC und 230 V/AC	8,5 VA

Standard voltages

24 V/DC	**Art.-No. 266/032011**
24 V/AC	**Art.-No. 266/032012**
230 V/AC	**Art.-No. 266/032015**
Without control valve	**Art.-No. 266/032010**

Other voltages available on inquiry

Current consumption

24 V/DC	0,417 A
24 V/AC	0,354 A
230 V/AC	0,039 A

Also available with attached control valve

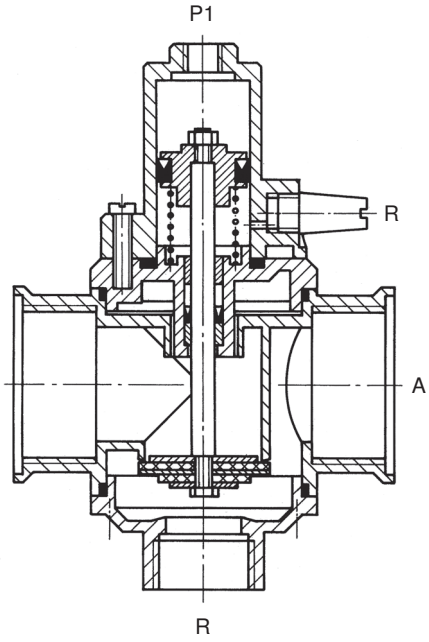

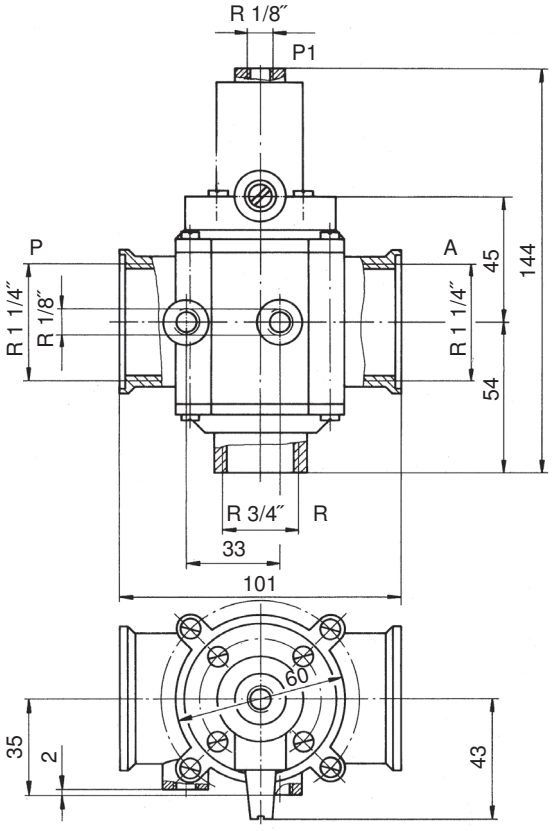

Connection R 1/8″ are fitted with screw plugs as standard.